Ipoint

Auto Acquisition System

PREFACE

This equipment manual provides user/operational and limited installation information on the Advantech AMT Limited Ipoint Satellite Auto-Aquisition Antenna Controller.

MANUAL SECTIONS :-

Introducing the Ipoint	An overview of the Ipoint and Ipoint basic systems.
Safety	Safe usage of the Ipoint.
Data Sheet	The equipment data sheet.
Operation	How to use and operate the Ipoint.
Alarms	A description of the alarm conditions which can occur.
Technical Description	A technical description of the operation of the Ipoint.
Installation	Limited information on how to install and set-up an Ipoint system, includes information on the external connections to the Ipoint..
Warranty and Repair Information	Warranty and repair service provided by Advantech AMT Ltd.
Appendices	Various information, some of which may be antenna type specific.

CONTENTS

SUBJECT **PAGE**

SUBJECT **PAGE**

INTRODUCING THE Ipoint

The Ipoint Auto Acquisition Antenna Controller is a microprocessor based controller designed for use on small mobile or transportable dish antennas. It is designed as an OEM product to be integrated with the antenna by the system provider. Some details of the installation and operation of the Ipoint may vary depending on the particular antenna or system integrator.

The Ipoint uses information it has on the position and orientation of the antenna together with information on the required satellite to position the dish and acquire and peak on the required satellite automatically without operator intervention.

The position information is typically provided by an included GPS receiver and the orientation information by an included magnetometer compass and an included clinometer, both used in conjunction with relative movement information from drive system encoders or axis mounted resolvers or potentiometers.

The information on the required satellite may simply be the nominal longitudinal slot, but may also include information on the frequencies and modulation/coding of some of the signals expected to be present on the satellite.

Magnetic compasses typically have relatively large errors due to both local and global variations in the magnetic field. Low cost clinometers also have a degree of error. The Ipoint uses pattern recognition algorithms on satellites in the arc to identify its true pointing and compensate for these errors. The actual satellite position will also vary from the theoretical longitude calculated position due to inclination and East/West movement. Conventional searching and peaking algorithms, together with identification from the known information are used to finally acquire and peak on the required satellite.

A Typical System

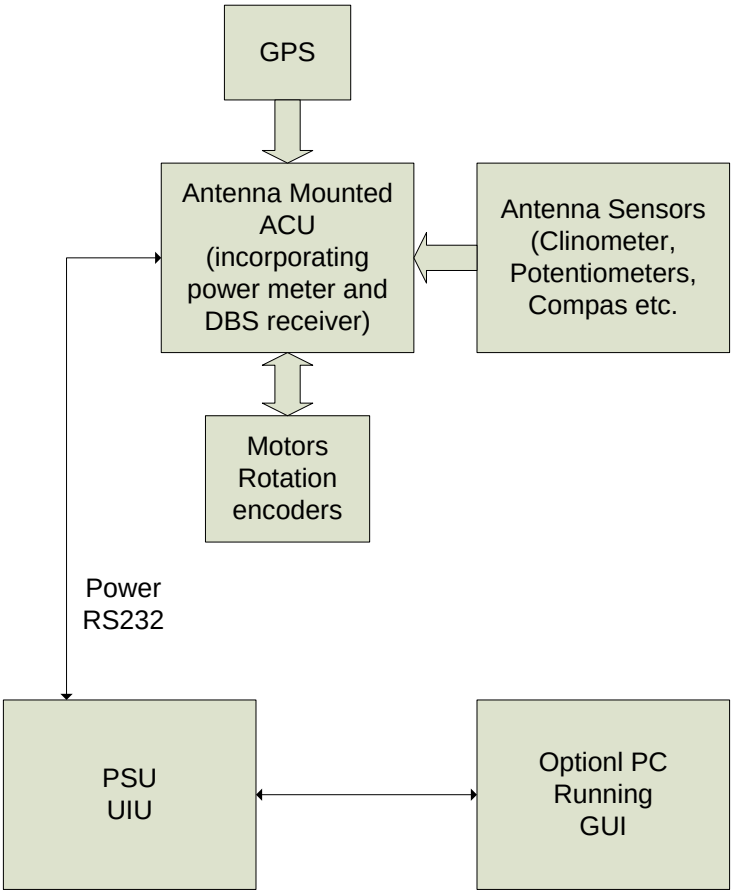

A block diagram of a typical system is shown above. It shows the GPS receiver, clinometer, drive system encoders and some sensor switches (such as stow position sensors) that may be present on a typical system. It also indicates that the Ipoint incorporates both a power meter and a DBS receiver used for peaking and identification of satellites.

The Motor Drive circuits are incorporated on the ACU card, which is typically mounted inside the dish pedestal or in a box fitted to the rear of the disk. However, in some systems the Ipoint box may be mounted in other locations.

The Ipoint Box operates from a 28V DC supply and the IDU, Indoor Unit, incorporates the power supply to provide this DC power. Different IDUs are available depending on the power requirements of the antenna motors.

The Ipoint may be controlled from the front panel of the IDU, an optional hand held controller, or via a remote control link using an RS232 connection.

1. SAFETY

WARNING

POSSIBLE LETHAL POTENTIALS EXIST WITHIN THIS EQUIPMENT

THE COVERS SHOULD NOT BE REMOVED EXCEPT BY QUALIFIED PERSONNEL.

SWITCH OFF POWER AND ISOLATE SUPPLY BEFORE REMOVING COVERS.

IF IT IS NECESSARY TO OPERATE THE EQUIPMENT WITH THE COVERS REMOVED FOR SERVICING PURPOSES ALL NECESSARY PRECAUTIONS SHOULD BE TAKEN TO PROTECT AGAINST ELECTRIC SHOCKS

ELECTRICAL

Fusing

The unit is protected by a fuse in the live/phase power supply line of the UIU.

Care should be taken to ensure that the power cable is correctly connected to the power source such that the live/phase connection of the UIU is connected to the live/phase terminal of the supply.

When replacing the fuse be sure to do so with one of the correct value and type.

Earthing

It is important that the electrical supply has a good and proper earth which is connected through to the UIU via the power cable.

MECHANICAL

Mounting

The UIU must not be mounted so that it is supported by the front panel only. A proper rack mounting kit must be used. This may be either of the fixed mounting type or the sliding rail type.

EMC

The unit is designed to meet the requirements of the EC EMC Directive and conforms to the relevant standards for EMC emissions and immunity.

2. DATA SHEET

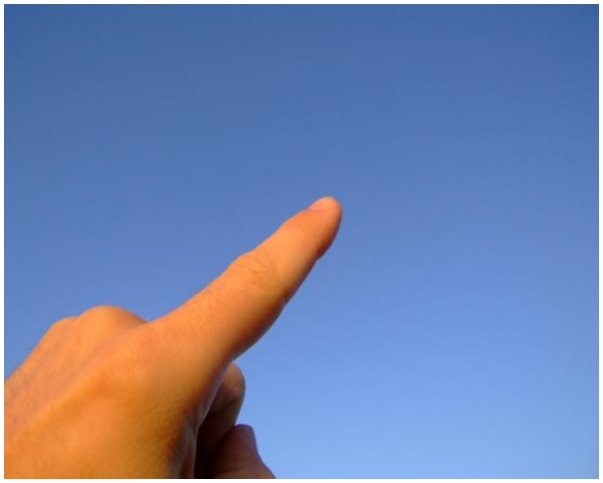

- **Antennas up to 2.4M**
- **Vehicle mounted**
- **Fly Away**
- **Single Button Operation**
- **INTRAC- *lite*™ & INTRAC™ Options**
- **Optional Integrated DVB-RCS Modem**

FEATURES:

- **Simple Operation**
- **Acquires the satellite within minutes**
- **Completely automatic one button acquisition of required satellite**
- **No Additional Equipment Required**
- **Low cost, high performance and reliable satellite acquisition**
- **Antennas up to 2.4 metres in diameter**
- **Uses industry standard position transducers (Potentiometers, motor shaft encoders and inclinometers)**
- **Includes magnetometer compass for initial auto orientation**
- **Uses GPS receiver for accurate geographic location**
- **Directly drives 24V DC motors (for Az, El and Pol) up to 12A**
- **Supports C, Ku, L, Ka and X-Band Satellites**
- **Fully RoHS compliant**
- **INTRAC- *lite*™ & High Precision INTRAC™ Tracking Options**

The IPOINT™ Satellite Acquisition Controller is designed as an OEM unit for satellite communication system providers or antenna manufacturers and can be supplied in a configuration to suit most antennas. It uses industry standard position transducers and a sophisticated pattern recognition algorithm to confirm and refine its heading information using visible satellites. The controller is mounted on the antenna structure with a separate power supply and control panel in a rack mount unit for mounting within the equipment area.

The system is simple to install, set up and use. Following relocation of the antenna, the system will reliably and accurately locate and lock on to the designated traffic satellite rapidly within MINUTES without any operator intervention.

SPECIFICATIONS

Operational modes	Auto-acquire Unstow Stow Configure
LNB Power supply	Can provide 13/18VDC switchable at up to 600mA on RF cable to power LNB and diseq tones.
RF Signal Input	L-band signal from LNB Level -70 to -20 dBm
Display	2 line LCD display giving Mode, Signal Level Indication and Position Information
Motor Drive	Can drive all motors at 24VDC up to 12A. Pulse width modulation from 10% to 100%.
Limit Switches	Stow Azimuth and Elevation switches
Optional Beacon Receiver Input	Voltage varying directly with received signal strength (in dB). Sensitivity 0.1V / dB to 1.0V / dB Input 0 to 10V max

OPTIONS

Hand Held Controller	Hand Held Controller with LCD display
Tracking Options	Enables antennas to accurately track satellites with orbital inclinations up to and beyond 10°
Integrated DVB-RCS Modem	Fully integrated Advantech Satellite Networks S4100 DVB-RCS Modem

PHYSICAL

Temperature Range	-20ºC to 55°C - Operating -40°C to 85°C - Non Operating (storage)
Extended Temperature Range Option	-40ºC to 55°C - Operating -40°C to 85°C - Non Operating (storage)
Humidity	5% to 95% RH non condensing - Operating 0% to 99% RH non condensing - Non Operating (storage)
Altitude	10,000 feet max
Input Power	110 or 230V, single phase, 50/60Hz, 500W
Dimensions	Antenna mounted controller 10.8” (275mm) x 10.3” (262mm) x 2.7” (69mm) Rack mounted Control panel and PSU: 19” (483mm) x 1.75” (44mm) x 16”(406mm)
Mounting	Antenna mounted controller: Antenna specific mounting brackets Rack mounted Control panel and PSU: Standard 1U rack mount

CERTIFICATION

Standards	EN55022 and EN50082-1

3. OPERATING THE Ipoint

The **Ipoint** may be operated directly from the front panel of the User Interface Unit (UIU), a hand held controller or via a remote control link.

A Graphical User Interface (GUI) program is provided. This runs under Windows 2000 or Windows XP on any standard PC and communicates with the Ipoint ACU via the remote control port on the front panel of the UIU. A version that runs under Vista is in preparation. A serial interface cable which connects from the UIU RJ11 connector to a standard 9 way female serial connector is provided with the UIU. This is wired to plug directly into a standard 9 way D-type serial port on a PC.

The UIU only implements direct user comands. It allows the operator to select the reference and target satellites from the existing list and to command Deploy. It allows the user to define the Final Pol and Final LNB settings following the deploy and also allows direct control commands such as Standby, Jog, Stow, Switch pol or Switch LNB. A complete list is given below.

The UIU does not allow the user to change parameters or to add or modify data in the satellite database. These operations can be performed via the GUI.

FRONT PANEL CONTROL

manual control keys

arrow keys The Up/Down arrow keys are used mainly to navigate up or down the menu lists. In some menus they may be used to select the parameter values. In some menus the Left/Right arrow keys are used to select the parameter to modify. In most menus the Right key displayes a short help message and the Left key reverts the display to the parameter value.

enter key Used in menu mode to select the menu, or menu option, which is currently at the left of the top line and displayed in UPPER case.

clear key Used to navigate backwards through the tree. In some cases this may take the user back to the top of the first tree (DEPLOY)

display The display is a 2 line 24 character display. The positions of elements on the display are described in the descriptions below.

OPERATIONAL MENU

The **Ipoint** may be operated via the UIU menu system. The unit powers up at the top of the main tree. The main tree entries are:

DEPLOY
STANDBY
STOW
SWITCH POL
SWITCH LNB
SATELLITE
- TARGET
- REFERENCE

JOG ANTENNA
USER SETUP
- FINAL POL
- FINAL LNB
- ORIENTATION
- LOCATION
- GPS OUTPUT

ALARMS
SYSTEM INFO
INSTALLER
- SATELLITE T(able)
- SATSCAN
- SATSCAN SET
- LNB TYPE
- ACQUIRE MET(hod)

COMMISSION
- ANTENNA
- PARAMETER

The left hand main tree entries will be displayed on the left hand side of the screen with the current entry in UPPER case on the top row and the next entry in lower case on the second row. The ^ and v keys move through these entries.

To access an entry use ^ or v to make the entry UPPER case on the top row of screen and press enter. This will take you to the next level which may have one or several entries. Again the entries can be navigated using the ^ and v keys and entered using enter. When an entry has a number of possible values pressing enter repeatedly will cycle through the values. Pressing clear will move

backwards through the tree and save any value that has been changed. In some cases clear will take you directly back to the top of the main tree.

DESCRIPTION OF MENU FUNCTIONS

DEPLOY Accessing Deploy will deploy the antenna using the currently selected reference and target satellites which may be selected using the “SATELLITE” entry. Following acquisition the FINAL POL and FINAL LNB definitions will be set. These can be defined before accessing deploy from the “USER SETUP” entry

STANDBY Always commands the system into Standby mode and aborts any operation that was in progress. Even while executing another command, pressing Clear repeatedly should get back to the main menu so that the arrow keys can be used to navigate to Standby and Standby selected. This will abort the present operation and return the system to Standby.

STOW Commands the antenna to stow. The exact stowing sequence depends on the antenna type, but typically it will be a sequence of:
Go to the preliminary stow position
Proceed to stow position which might be defined as a particular angle or by the operation of a stow position switch.

SWITCH POL Accessing SWITCH POL will cause the polarisation axis to rotate 90 degrees. The direction of rotation will depend on the current position. If the current position is positive, then the rotation will be negative and if the current position is negative, the rotation will be positive.

SWITCH LNB Invoking this entry displays three integers on the 2nd line. The first one will have a > cursur in front of it to indicate it is selected. The Left/Right arrow keys may be used to move the selection and the Up/Down keys may be used to toggle the value of the selected parameter between 0 and 1. In order from Left to Right the three parameters are Power (0=off, 1=on), Voltage (used to select polarisation on some direct to home systems, usually should be set to 0 for professional systems) (0=18v, 1=13v), tone (0=off, 1=on). Tone (22kHz) is used to select the band (0=tone off=low band, 1=tone on=high band). When then three parameters have been set it is important to press **ENTER** for the values to be accepted. The display will flash a COMMAND SUCCESSFUL message

SATELLITE SATELLITE accesses a two entry list. The two entries are TARGET and REFERENCE. The currently set longitudes

of the Target and Reference satellites are displayed to the right of these two list items. If these correspond to the desired Target and Reference, then the operator can press the CLEAR key to return to the main menu.

TARGET invokes a numeric display indicating the nominal longitudinal position of the target satellite. The cursor is indicated by a flashing digit and can be moved using the < and > keys. The value at the cursor position can be changed using the ^ and v keys. Pressing ENTER will save the value. The longitude does not need to correspond to the longitude of a satellite in the data table, but if the value is within 0.2 degrees of a stored satellite, it will be assumed that this stored satellite is the intended target.

REFERENCE invokes the list of stored satellites. The ^ and v keys are used to scroll through this list until the required reference is on the top line of the screen. Pressing the ENTER key will select this as the reference satellite

JOG ANTENNA

Accessing JOG ANTENNA puts the system into manual jog mode and the Az and El axes can be jogged using the ^, v,> and < keys. Pressing enter again will toggle the mode between (Az & El jog) and (Polarisation axis jog (using > and < keys)). If the enter key is pressed while a ^, v, > or < key is already active then the speed will change to fast. This is not a latching function and the speed will revert to slow as soon as the enter key is released. Clear will take the system back out of Jog mode.

USER SETUP

User Setup accesses a further list. This can be navigated in the usual way using ^ and v and accessed using enter.

FINAL POL defines the polarisation that will be set following acquisition. Pressing ENTER toggles the value between 0 and 1. A value of 0 commands horizontal (receive) setting, while 1 commands vertical receive.

FINAL LNB is used to set the state of the LNB, following acquisition. Pressing Enter displays three integers on the 2nd line. The first one will have a > cursur in front of it to indicate it is selected. The Left/Right arrow keys may be used to move the selection and the Up/Down keys may be used to toggle the value of the selected parameter between 0 and 1. In order from Left to Right the three parameters are Power (0=off, 1=on), Voltage (used to select polarisation on some direct to home systems, usually should be set to 0 for professional systems) (0=18v, 1=13v), tone (0=off, 1=on). Tone (22kHz) is used to select the band (0=tone off=low band, 1=tone on=high band). When then three parameters have been set it is important to press **ENTER** for the values to be accepted. The display will flash a COMMAND SUCCESSFUL message.

ORIENTATION. This command displays three values on the second line. These are the current Pitch Roll and Heading of the antenna mount(in degrees). Currently only the Heading is implemented, the other values will always return zero.

LOCATION. This command displays three values on the second line. These are the current Longitude (deg), Latitude(deg) and Altitude (m above sea level) of the antenna.

GPS OUTPUT. This command sets the parameters for the GPS information output from the UIU front panel serial port in some applications. Initially the baud rate will be displayed and this can be toggled between 19200 and 4800 by pressing the Enter key. Pressing the Down arrow will select the TYPE which is either Constant or Lock. Pressing Enter will toggle between Constant and Lock. Pressing **CLEAR** will save the currently displayed values and return to the top of the previous menu. GPS output may not be implemented on all versions of the UIU software and changing these parameters will have no effect in these versions.

ALARMS Displays a scrollable list of the active alarms

SYSTEM INFO Currently System Info displays the software version of both the IUI and the ACU.

INSTALLER Displays a further list which is currently
SATELLITE T(able)
SATSCAN
SATSCAN SET
LNB TYPE
ACQUIRE M(ethod)
None of these features are currently implemented from the UIU. Use GUI

COMMISSION Displays a further list which is currently
ANTENNA
PARAMETERS
Neither of these features is currently implemented from the UIU. Use GUI

USING THE GUI

The GUI program (ipoint.exe, version 0.63 or later) should be run on a standard PC running Windows 2000 or Windows XP, with a serial port. The serial port should be connected to the port on the front panel of the UIU using the cable provided.

When the GUI is first run the correct serial port should be selected from the pull down list found under:

Configuration > Communication > Port.

The port information can be saved by performing:

File > Save operation.

When the GUI is running it will take control from the UIU and the UIU front panel will display “PASS THROUGH MODE”.

Reading/Setting parameters

A number of parameters can be read and set from the GUI. These are grouped under Commission, Installation and User and can be accessed from a list available under one of:

Configuration > Commission
Configuration > Installation
Configuration > User

A full list of the parameters is provided in Appendix B, but individual parameters will be mentioned later in this discussion.

The parameters may be read by selecting (left clicking) the parameter. Currently there is a bug in the program which means that to be certain of reading the correct values it is necessary to read the parameter, press cancel and then read it a second time. This bug will be rectified in a future upgrade.

To set a parameter select the parameter, edit the contents of the value boxes and click on OK. There is no need to do this operation twice.

Hexadecimal numbers will be displayed and should be entered with the prefix 0x.

Saving the parameters

Setting a parameter normally sets the value currently being used although some parameter changes may not be used until after a Reset or Power cycle. Setting a parameter does not save that parameter in non-volatile storage so that it will be remembered over a Reset or Power Cycle.

Therefore after changing one or more parameters always perform a:

Configuration > Save

command before performing a Reset or a power cycle.

Archiving configuration data

The current state of the parameters may be saved to a computer file by using:

Configuration > Download Config

And specifying a file path and name. A saved configuration may be loaded back into the Ipoint by using:

Configuration > Upload Config

And specifying the path and name of the saved information. Remember to perform a:

Configuration > Save

after uploading new information.

SATELLITE CHANNEL DATA

The Ipoint uses satellite channel data stored in a database. Typically some suitable satellite data will have been installed in the database by the system integrator. You may also be provided with a .cfg file of satellite channel data. The existing satellite channel data can modified or additional data entered using the GUI.

Uploading/Downloading

Satellite channel data may be Downloaded from the Ipoint or uploaded to the Ipoint using:

Satellites > Download Satellites
Satellites > Upload Satellites.

You should perform a

Satellites > Save Satellite Data

after any changes to the satellite database.

Editing Satellite Data

The satellite data may be edited from the satellite list that is displayed when

Satellite > Edit is commanded.

The first time (in any GUI session) that this is commanded the data is downloaded from the ACU to the GUI. This may take a few minutes. If only the first n satellite information is required the download can be stopped when the download

window is displaying n+1 or greater by clicking the cancel button.

Satellite data locations can be edited by highlighting the location and clicking edit. Individual satellite data can be downloaded to or uploaded from computer files by highlighting the source and destination and clicking the Upload or Download buttons.

The directory that is used for these data files and displayed in the left hand window is defined in:
Satellites > Preferences

The information required for each satellite is:

The nominal **Longitude** in degrees. East is positive and West is negative

The information required for each DVB channel is:

Freqency in GHz
Symbol Rate in Msymbol/s
Code Rate where

0 indicates rate 1/2
1 indicates rate 2/3
2 indicates rate 3/4
3 indicates rate 5/6
4 indicates rate 7/8

Polarisation where 0 indicates Horizontal and 1 vertical
Currently all DVB channels used for identification should be horizontally polarised and this parameter should be set to 0 indicating horizontal. Some circularly polarised signals may also be detectable with this setting.

Remember to use Satellite > Save Satellite Data after changing any satellite data.

CONTROL FROM GUI

As well as being used for management of the parameters and the satellite database, the GUI can be used to control the system.

Reference and Target satellites can be set in:

Configuration > User > Target / Reference

When the set has been accepted the two longitudes will appear in the small boxes above the Deploy button.

Clicking the **Deploy** button will cause the system to auto acquire using those satellites.

Other buttons available are:
Stow – stows the antenna
Unstow – unstows the antenna to the unstow position
Orientation – not normally used by user as performed automatically as part of a Deploy.
Calibrate – should not be used unless setting up a new system
GoTo – commands motion to a particular set of angles.
Standby – can be used at any time to stop the antenna moving.
Set LNB – brings up a window allowing the LNB parameters to be immediately changed. The parameters are LO frequency, Power, Volts and Tone. These should be set as described in the LNB settings section below. This function is primarily provided to allow the Tone (and hence band) to be manually changed after a satellite has been acquired. These settings will be over-riden by the LNB, Default LNB and Final LNB settings when the next Deploy is invoked.
Switch Pol – commands an immediate rotation of the pol feed by 90 degrees so that the opposite linear pol can be used.

The GUI can also be used to manually jog the antenna using the jog screen that appears from:

Configuration > Jog
In this mode the keyboard arrow keys will also operate to give Az and El movement.

LNB Settings

The LNB settings can be set in menus available under Configuration > Installation.

There are three sets of LNB parameters accessed by:

Configuration>Installation > LNB and
Configuration>Installation > Default LNB.
Configuration > User > Final LNB

The LNB parameters define how the LNB will be set up when the system is searching channels and the Default LNB parameters define how it will be set up when performing the initial searches. The Final LNB parameters define how the LNB will be set after the target has been acquired.

The LNB parameters to set are LO frequency, Power and Polarisation.
For fixed LO LNBs the LO frequency should be set to the actual LO frequency (in GHz). For universal LNBs where the LO is changed by a tone (22kHz) on the Coax, the LO frequency should be set to 0.0.

Power should be set to 0 if the LNB is separately powered, or 1, if it expects power up the Coax cable.
The Polarisation parameter should be set to indicate the polarisation that would be seen by the LNB when the feed is in its nominal zero degree position (for a satellite on the same longitude). 0 indicates horizontal and 1 indicates vertical. Normally this parameter is set to 0.

The Default LNB parameters defined in the GUI to set are LO frequency, Power, Volts and Tone. LO frequency should be set as for the LNB. Power should be set to 0 if the LNB is separately powered, or 1, if it expects power up the Coax cable. If the Volts is set to 0 then 18V will be applied to the cable, if it is set to 1 then 13V will be applied. Tone should be set to 0 for no tone (low band) or 1 for active tone (high band).

The Final LNB parameters to set are Power and Volts and Tone. Power should be set to 0 if the LNB is separately powered, or 1, if it expects power up the Coax cable. If the Volts is set to 0 then 18V will be applied to the cable, if it is set to 1 then 13V will be applied. Tone should be set to 0 for no tone (low band) or 1 for active (22kHz) tone (high band).

Final POL

The Final Pol parameter should be set using

Configuration > User > Final Polarisation.

This parameter defines the polarisation settings of the feed following acquisition. If it is set to 0 then horizontal reception will be enabled. If the parameter is set to 1, then the feed will be rotated 90 degrees to enable Vertical Pol reception. Note that most antennas to which the Ipoint is fitted will use a two port feed. When reception is on Horizontal polarisation, the transmission (without rotating the feed) will be on Vertical polarisation. Similarly with the feed rotated for Vertical polarisation reception, the transmission will be Horizontally polarised.

Final Band

The Final Band parameter should be set using

Configuration > User > Final LNB.

This parameter defines the LNB settings to be invoked following acquisition.

The Final LNB parameters to set are Power and Volts and Tone. Power should be set to 0 if the LNB is separately powered, or 1, if it expects power up the Coax cable. If the Volts is set to 0 then 18V will be applied to the cable, if it is

set to 1 then 13V will be applied. Tone should be set to 0 for no tone (low band) or 1 for active (22kHz) tone (high band).

TYPICAL USE SEQUENCE

A typical usage sequence would be:

Unpack and setup the antenna system

Ensure that satellite channel data exists for a number of locally visible satellites including the required reference and, preferably, the target satellites. Data does not need to exist for the target, but, if it is available, it allows confirmation that the correct satellite has been acquired. **Note** that if the UIU is to be used for selecting the Reference and Target satellites, then those satellites must appear in the first 10 slots of satellite data

Ensure that the reference and target satellites are as required and that the final pol and final LNB settings match the settings required to access the satellite after acquisition.

Command Deploy (from the UIU or GUI).

4. ALARMS

The Ipoint control software incorporates a number of continuous integrity checks and system monitoring functions. If any of these fail at any time an alarm will be raised. When any of these alarms is raised the mode displayed on the UIU or in the GUI will be ALARM. In ALARM mode the antenna will be stationary. The nature of the alarm will be shown in the message pane of the GUI.

A list of alarms is given below.

"ERROR"
"DRIVE_FAIL_AZ"
"DRIVE_FAIL_EL"
"DRIVE_FAIL_POL"
"DRIVE_DIR_AZ"
"DRIVE_DIR_EL"
"DRIVE_DIR_POL"
"SOFT_LIMIT_CCW_AZ"
"SOFT_LIMIT_CW_AZ"
"SOFT_LIMIT_DWN_EL"
"SOFT_LIMIT_UP_EL"
"SOFT_LIMIT_CCW_POL"
"SOFT_LIMIT_CW_POL"
"HARD_LIMIT_CCW_AZ"
"HARD_LIMIT_CW_AZ"
"HARD_LIMIT_DWN_EL"
"HARD_LIMIT_UP_EL"
"HARD_LIMIT_CCW_POL"
"HARD_LIMIT_CW_POL"
"ADC_AZ"
"ADC_EL"
"ADC_POL"
"ENC_AZ"
"ENC_EL"
"ENC_POL"
"LOCATION"
"ORIENTATION"
"NO_HEADING"
"IGNORE_GPS"
"IGNORE_MAG"
"AQ_SAT_SWEEP_FAIL"
"AQ_PEAK_FAIL"
"AQ_GOTOSAT_FAIL"
"AQ_WALK_ARC_FAIL"
"AQ_DVB_FAIL"
"AQ_HORIZON_SCAN_FAIL"
"AQ_COUNT_FAIL"
"AQ_XSCAN_FAIL"
"CURRENT_HB1"
"CURRENT_HB2"
"TEMPERATURE"

"BEACON FLOOR MAX"

Recovery from Alarm Conditions

Alarms may be cleared by commanding STANDBY. If the alarm was a hard limit alarm, then the antenna may be jogged in the direction away from the hard limit direction.

5. TECHNICAL DESCRIPTION

Introduction

This section looks at and explains the Operational Modes and Functions of the Ipoint including the autopointing strategies used. The Ipoint is supplied with different software loads depending on the application and this manual describes the AP1 software option.

THE MODES

The Ipoint has eleven major operational modes :-

- Standby
- Deploy
- Stow
- Unstow
- Orientation
- Jog
- GoTo
- Peak
- Acquire
- Alarm
- Calibration

Standby

Standby mode is a “no movement” mode, the antenna is not driven (the brakes where fitted will be applied) but the pointing angles and signal level are monitored and displayed.

Standby mode is entered in one of two ways :-

- selected by the operator
- on the successful completion of another mode.

Deploy

Deploy is a pseudo-mode that invokes a sequence of other modes to achieve a complete deploy operation. The exact sequence is dependant on the situation when it is commanded. Starting from a stowed position the sequence would be:

- Unstow
- Orientation
- Acquire (incorporating Peak).

Stow

Stow is the mode indicated while the antenna is being stowed following a Stow command. On successful completion of the Stow, the system will return to Standby. During Stow, if the Elevation angle is initially below the El Fowl angle, the Elevation will be driven up to the Elevation Prelim Stow angle and then the Azimuth will be driven to the Azimuth Prelim Stow angle. If the Elevation angle is above the El Fowl angle then both axes will be driven simultaneously to the Prelim Stow angles. From there Elevation will be driven down to the stow position.

Unstow

Unstow is the mode indicated while the antenna is being unstowed following a Unstow command. On successful completion of the Unstow, the system will return to Standby. During unstow, the Elevation angle will be driven up to the Unstow position.

Orientation

Orientation is the mode displayed while the system is reading the compass (or magnetometer). Orientation can be commanded by the operator, but is normally invoked automatically by the system as part of a Deploy sequence. In Orientation mode the Elevation axis will be driven to the “Heading El” position and the compass (or magnetometer) will then be read.

Jog

In Jog mode the antenna can be manually jogged in all axes. Two jog speeds are available.

Goto

The GoTo mode enables the antenna to be driven to specified angles in all axes. During the GoTo operation, if the axis is far from the commanded position, the antenna will, initially, be driven at high speed, switching to slow speed as it approaches the commanded position. When the commanded position has been reached the system will return to Standby.

Peak

In Peak mode the antenna is moved in both axes to maximize the RF power recieved from the satellite. Peak is not normally invoked by the operator, but is invoked automatically as part of an Acquire or Deploy sequence.

Acquire

When in Acquire mode the system will acquire the required satellite from information of the nominal longitude. From this longitude and the known (from GPS) position the system calculates the expected Azimuth and Elevation pointing. Using this information the system then performs the AP1

auto acquisition algorithm to locate and verify the required satellite. The auto acquisition algorithm is described below.

Acquire is normally automatically invoked as part of a deploy command.

Alarm

The system enters Alarm mode whenever an alarm is triggered. To exit the alarm mode Standby must be explicitly commanded.

Calibration

Calibration mode is used to auto calibrate the antenna analogue sensors (elevation clinometer and azimuth potentiometer) against the digital encoder signals from the motors. It is performed as part of the setup procedure. It will normally be performed by the antenna manufacturer or system supplier prior to delivery to the customer and should only need to be performed again if the Ipoint ACU is changed or the analogue sensors are changed or physically moved. Please contact the factory for set-up instructions specific to your antenna.

ACQUISITION METHOD

The AP1 auto-acquisition method is described below. Other software options may use a different method more suited to the particular application.

The acquisition is based on the concept of a Reference and a Target satellite. The Target satellite is the satellite that you intend to pass traffic through. The Reference satellite is an easy to find and identify satellite that is used to calibrate out any errors (particularly in the compass), so that the Target can be found accurately. The ideal Reference is reasonably close to the Target to eliminate any additional errors that might occur with a large azimuth displacement of the two satellites, but the system will operate successfully with widely spaced Reference and Target. The Reference and Target satellites can be the same satellite

Normally the system will make a wide azimuth search to locate and verify the reference, correct its compass and then find and peak on the Target. This process will typically be completed from stow within 3 minutes.

If the system fails to, initially, verify the reference or the target then a number of strategies are automatically used to try and find an alternative reference point and complete the acquisition of the target. These strategies may take considerably longer, but typically will acquire the required Target.

The satellites are verified using information on some expected DVB channels that are transmitted by the satellite. This channel information is kept in a satellite database that may contain information on up to 10 channels on each of 30 satellites. Some initial satellite database information may be provided by the system integrator, but the database can be maintained and corrected by the user using their own knowledge of the channels present or from information that may be available from other sources. Details of the information required is provided in Section 3, Operation.

SETTABLE PARAMETERS

The settable parameters are described in section 3, Operation and a list is provided in Appendix B.

6. INSTALLATION

Introduction

The **Ipoint** system comprises a single PCB that is typically mounted inside the dish pedestal or in a box attached to the rear of the dish. Your installation may vary from this with the PCB mounted in some other location. A number of connections to this PCB are required and these are shown in the block diagram below.

The installation will normally have been performed by the antenna manufacturer or system integrator.

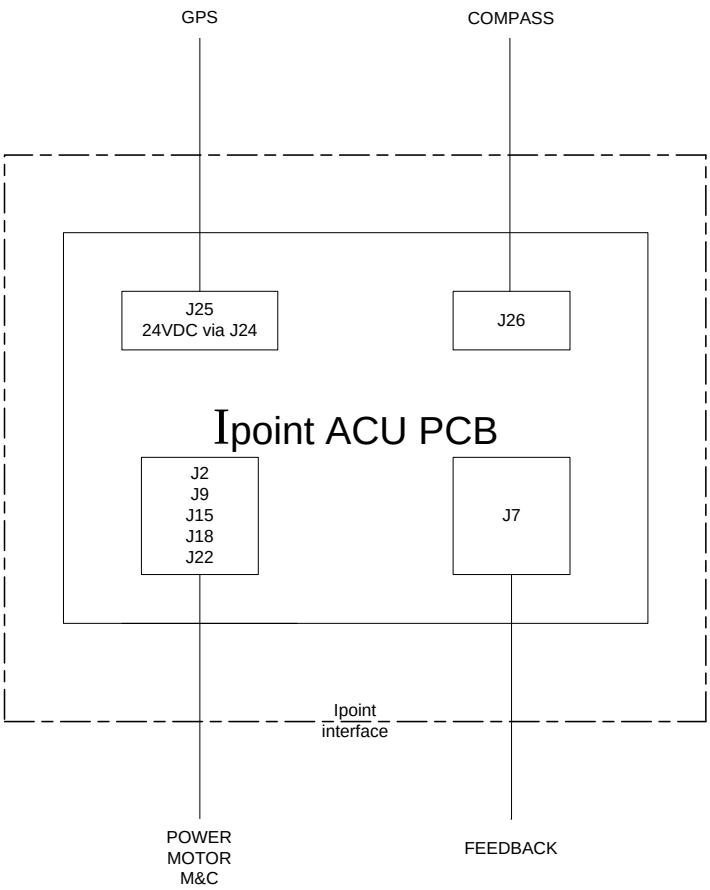

BLOCK DIAGRAM OF Ipoint CONNECTIONS

Connections (general)

The Connections are shown in the table below. Typically most of the connections from the **Ipoint** system are carried via two 37 way D-type connectors (designated MC1 and MC2) and the connections to these two connectors are shown in the table below. These connectors are wired to various connectors on the PCB and these are also defined in the table. In addition to these main connectors there are

also two further sets of connections, one for the GPS receiver and one for the magnetometer compass.

POWER, MOTOR and M&C PIN ALLOCATIONS

Signal Name	PCB connector
POWER	
+28 v	J2, P1
	J2, P2
Gnd	J2, P3
MOTORS	
Az Motor +	J9, P1
Az Motor -	J9, P2
El Motor +	J15, P1
El Motor -	J15, P2
Pol Motor +	J9, P3
Pol Motor -	J9, P4
Stow Motor +	J15, P3
Stow Motor -	J15, P4
BRAKE	
Brake NO	J18, P2
Brake NO common	J18, P1
Brake NC	J18, P4
Brake NC common	J18, P3

M&C SERIAL INTERFACE

Serial Tx from ACU	J22, P3
Serial Rx to ACU	J22, P1
Serial Gnd	J22, P2

Power

28V DC is normally provided from a separate power supply unit that may be incorporated within the rack mounted User Interface Unit (UIU).

Motors

The Ipoint is designed to directly drive 24V DC motors up to 12 Amps. The systems are supplied with different Power Supply Units depending on the current required by the motors and so your system may have a lower current capability than this maximum. The speed of the motors is controlled using Pulse Width Modulation set by the software.

Brake

A relay is provided for operating an Elevation Brake. However, note that the brake relay may not be fitted to units supplied for systems that do not require a brake. The relay is energised whenever the elevation motor is being driven.

M&C serial Interface

The system can be controlled and monitored using a serial M&C interface. Interface and protocol details are provided in a separate document.

FEEDBACK SIGNALS

Signal Name	PCB Connector
Az Encoder +ve (5VDC)	J7,P13
Az Encoder A	J7,P14
Az Encoder B	J7,P15
Az Encoder Gnd	J7,P16
Az pot wiper	J7,P26
Az pot +ve (12VDC)	J7,P25
Az pot Gnd	J7,P24
El Encoder +ve (5VDC)	J7,P17
El Encoder B	J7,P19
El Encoder A	J7,P18
El Encoder Gnd	J7,P20
El Clinometer Wiper	J7,P29
El Clinometer +ve (12VDC)	J7,P28
El Clinometer Gnd	J7,P30
Pol Encodedr +ve (5VDC)	J7,P21
Pol Encoder B	J7,P23
Pol Encoder A	J7,P22
Pol Encoder Gnd	J7,P24
Pol Pot Wiper	J7,P32
Pol Pot Hi (+12VDC)	J7,P31
Pol Pot Lo (Gnd)	J7,P33
Az stow switch	J7,P1
Az Stow common	J7,P2
El stow limit switch nc	J7,P3
El Stow Limit common	J7,P4
Pol Stow sw no	J7,P7
Pol overtravel nc	J7,P5
Pol limits common	J7,P6
Remote stow switch	J7,P9
Remote deploy switch	J7,P11
Remote switches common	J7,P12

Azimuth Encoder

The system expects the azimuth motor drive chain to be fitted with an encoder. Power (+5VDC and ground) is provided to power the encoder. The Encoder A and Encoder B signals are normally expected to be quadrature logic signals with a pulse rate that will not exceed 12 kHz at maximum motor speed. For some antennas only one

encoder signal (Encoder A) is available and the ACU has to make its own decision on the direction of movement. The software can be configured to work with antennas where the relationship between the encoder pulses and the angle is expected to be linear or the non-linear relationship that results from using screwjacks.

Azimuth Potentiometer

The system can accept information from a potentiometer to be fitted to the azimuth axis. +12VDC and ground connections are provided to connect to the ends of the potentiometer. These should be connected so that the wiper sees a more positive voltage as the antenna moves in a clockwise direction.

Elevation Encoder

The system expects the elevation motor drive chain to be fitted with an encoder with similar characteristics to the azimuth encoder.

Elevation Clinometer

The system expects an elevation clinometer to be mounted on a part of the structure that moves in elevation with the reflector. +12V DC and ground connections are provided. The system expects the “wiper” to provide a voltage that changes linearly with elevation angle. The slope and offset of this voltage may be set in the software. The system typically calibrates the clinometer for small errors in linearity by using the elevation encoder.

Polarisation Encoder

The system can accept information from an encoder connected to the polarisation motor drive mechanics.

Polarisation Potentiometer

The system expects a potentiometer to be fitted to the polarisation axis. +12VDC and ground connections are provided to connect to the ends of the potentiometer. These should be connected so that the wiper sees a more positive voltage as the polarisation angle moves in a CW direction.

Switch Inputs

A number of switch inputs are provided. The effective polarity of most switches can be configured using a setup parameter

An Azimuth Stow switch input expects a switch activation to occur when the azimuth is at the stow angle.

An Elevation Stow switch input expects a switch activation when the elevation is at or below the elevation stow position.

A Polarisation Stow switch input expects a switch activation when the polarisation angle moves through the stow position.

A polarisation overtravel switch input expects a switch activation if the polarisation angle moves outside the expected range (in either direction).

Normally open remote stow and remote deploy switch inputs will initiate a stow or deploy sequence when momentarily closed. This feature is only available when the software has been configured for single button deploy and stow.

GPS and COMPASS CONNECTIONS

Signal Name	PCB connector
GPS	
24VDC if link J24 fitted	J25, P1
Serial out to GPS	J25, P3
Serial in from GPS	J25, P5
Ground	J25, P9
COMPASS	
Serial out to Compass	J26, P3
Serial in from Compass	J26, P5
Ground	J26, P9

GPS

Connector MC3 is for the attachment of a GPS receiver that issues and receives standard NEMA 0183 messages. 24VDC may be provided to power the GPS receiver if link J24 on the PCB is fitted.

Compass

Connector J26 (on PCB) is for the connection of an Advantech provided magnetometer compass. This may be mounted on a fixed or moving part of the antenna structure. When it is mounted on the moving part of the antenna the system software needs to know at what elevation angle the compass is nominally level.

7. WARRANTY & REPAIR

WARRANTY

Advantech AMT Limited warrants the Ipoint Antenna Control Unit (ACU) and User Interface Unit (UIU) for a period of 24 months from the date of dispatch.

The liability of Advantech AMT Limited under this warranty shall be limited to repair or replacement of defective units or parts thereof, at Advantech AMT's option, which are returned in accordance with the RMA procedure, carriage and insurance paid, to Advantech AMT Limited, 39 Edison Road, St.Ives, Cambridgeshire PE27 3LF. England. The returned unit(s) must be accompanied by completed RMA fault report and a document declaring that the equipment is returned for repair under warranty.
Subject to the unit being eligible for warranty repair Advantech AMT Limited will effect the repair and return the unit by pre-paid shipment to the originating location.
Subject to the shipment charges being the same as, or less than, that to the original location, the unit may be shipped to some other location as the customer may specify.
Under no circumstances shall Advantech AMT Limited be liable for any consequential or incidental costs or damage.

Exclusions

This warranty does not apply to any equipment which has been damaged through abuse, accident (such as lightning strike), negligence or failure to comply with Advantech AMT instructions for storage, installation and use as contained in the equipment manual(s).

Except as specifically provided above Advantech AMT Limited makes no warranties, expressed or implied, as to the merchantability of the equipment or its fitness for a particular purpose.

REPAIR SERVICE

Advantech AMT Limited will provide a repair service for all equipment manufactured by Advantech AMT Limited for a reasonable period.

Returning equipment for repair

Prior to the return of any equipment for repair, whether under warranty or by payment, Advantech AMT Limited must be contacted to obtain an RMA number and form and also to discuss the problem and confirm that the equipment needs to be returned. Also to agree the most effective solution to the problem and to discuss the method of return in order to avoid unnecessary duties and ensure that the packing is adequate to protect the equipment during shipment.

The cost of returning the equipment to Advantech AMT Limited will be paid by the customer.

Repairs not under warranty

Repairs to equipment not under warranty will be paid for by the customer. On receipt of the defective unit Advantech AMT Limited will investigate the fault, determine the most effective repair technique and issue a repair cost estimate. Repair work will not commence until the cost is authorised by the customer either by a Purchase Order or through a Repair Contract.

In certain circumstances repairs may be carried out on site by prior agreement.

Documentation

On completion of the repair the unit(s) will be returned to the customer together with a Repair Report and a repair contact name at Advantech AMT Limited.

Return shipment

The repaired unit(s) will be returned to the originating location with Advantech AMT Limited bearing the cost of shipment and in transit damage or loss.
The equipment may be returned to some other location at the request of the customer subject to the shipment cost being the same as, or less than, that to the original location.

Warranty of repairs

Advantech AMT Limited will warrant the repaired unit, in respect of the work and material of the repair only, for a period of 12 months from the date of return of the unit to the customer. However where the remaining time of the standard warranty exceeds 12 months the work and material of the repair will be warranted for that remaining period.

NOTE

Advantech AMT Limited reserves the right to charge for rectification of any faults caused as a result of attempts to repair equipment by third parties.

Set-Up/Calibration

Introduction

Following integration, the **Ipoint** system requires setting up and calibrating. This appendix describes how this process is performed on the HK RM120 antenna. For other antennas a similar, but slightly different, process will be required and this will be described in an alternative version of this appendix. This calibration should normally only be required once per system and would normally be performed by the antenna manufacturer or system integrator prior to handover to the end customer. The setting up and calibration should only need to be performed again if the Ipoint unit is changed or the mechanical relationship between the potentiometers or clinometers and the dish is altered.

Check that the GUI's configuration file ('C:\WINDOWS\ipoint.cfg') contains COMMISSION=0x1 in the [COMMUNICATION] section. This allows access to the commissioning functions.

The procedure is described below.

Wiring

The Ipoint unit and any ancillary equipment (GPS, clinometer) should be wired to the antenna as defined in chapter 6, Installation.

The HK antenna will normally connect to the Advantech UIU rack mounted control unit. This unit provides the power supply and also terminates the serial interface to the Ipoint. In some installations the power to the Ipoint unit may be supplied separately. The serial port (on the front panel) of the UIU should be connected to the serial port of a PC running the Ipoint RCM program (GUI). It may also be convenient to run a terminal emulator (such as Hyperterminal) on the PC so that the command line interface could be used, if required.
Tip: You can leave hyperterminal open while running the RCM program, by making sure you, first press the"Call->Disconnect button"on hyperterminal.

Procedure

Ensure the correct "Starting point" parameters are set. This can be done by uploading the "RM120Start-point_V01.cfg" file using the Configuration\Upload Config menu in the GUI.

From HypterTerminal the calibration start and end positions need to be set:

calazstart -175 0 0
calazend 175 0 0

calelstart 0 0 0

calelend 0 60 0

Once the parameters have been loaded save them using the Configuration>Save command.

Reset the Ipoint unit using Configuration>Reset.

Before performing the calibration level the base of the antenna in both pitch and roll axes. (ideally to within +/-0.5 degs).

Enable the Jog window using Configuration>Jog. This window contains jog buttons and some parameter windows.

Use the jog buttons to jog the axes and make sure they move in the correct direction. Az right is CW looking from above or to the right when standing behind antenna. Polarisation right is the feed rotating CW when viewed through the antenna from behind the antenna.

Drive the antenna in elevation until it hits the down limit switch. Note the El ADC reading (in Hex). Subract 480 (hex) from this value and note the new value. Note that the Windows (scientific) calculator is good for performing Hex calculation. Navigate to the Configuration>Commission>ADC Valid menu. Enter the new value as the Elevation Valid value. Set the Azimuth and Pol values to zero.

Navigate to the Configuration>Commission>Finetune menu and set all the boxes to zero.

Use an electronic level on the feed boom and jog the elevation until the level reads -7.0 degrees. At this angle the elevation beam direction of the antenna is approximately 11 degrees) Note the El ADC reading (in Hex) shown in the top right hand window of the Commission/Jog window.

Jog the Az axis until the boom is central on the base platform. Note Az ADC reading (in Hex).

Jog pol so that the feed/feed boom is central in the frame. Note the Pol ADC reading (in Hex).

Navigate to the Configuration>Commission>ADC Offset menu and enter the three readings noted above into the appropriate boxes.

Save the configuration using Configuration>Save command.

Reset the system (Configuration > Reset).

Ensure there is sufficient room around the antenna for the boom to move around. The next operation will swing the antenna +/-180 degs around the base position. Also El will be driven up to around 60 degrees.

Command Calibration of the antenna using the 'calibration' button (bottom near right hand side of the Jog screen). The antenna will move ~180 degrees to left, 180 degrees to right and then slowly back to left, followed by some elevation movements. The calibration will take about 60 minutes to complete. The GUI will display STANDBY when the calibration is complete.

Save the configuration using Configuration>Save command.

Using Configuration>Commission>Finetune set the Elevation Finetune parameter to 11.00. This is because, with the feed boom at -7 degrees (the calibration position) the actual beam pointing is 11.00 degrees.

The unstow & preliminary Stow El positions should have been set to 21.6 degrees by the cfg upload. Check this with the Configuration > Installation > Stow Prelim and Unstow menus.

The Stow position should have been set to -50.00 degrees by the cfg upload. Check this with the Configuration > Installation > Stow menu. Stow on this antenna uses a stow switch to define the stow position. Make sure that the SWMASK parameter is set to 2 (Configuration > Commission > Switch Mask). This mask defines the sense of the switch operation.

Check the stow operation by commanding Stow. The antenna should drive first to the Stow Prelim position (which may be up from the current position, centre the azimuth and then drive down to the set stow position of -50.0 degrees. From here it should continue to drive down slowly. Before it reaches the actual stow position check the operation by manually activating the stow switch. The antenna should stop. Command stow again and the antenna will unstow and restow. This time let the antenna proceed until it activates the stow switch and confirm that drive ceases. Save the configuration using Configuration>Save command.

Once the Stow position has been set, the Elevation low limit should be set to an operational low limit (say -5.0 degrees).

Check the magnetometer works and that the magnetic heading offset is reasonable.

Press the Unstow button on the main screen.
Press the Orientation button on the main screen. The Ipoint will then move elevation to level and read the magnetometer. The estimated true compass heading (taking into account the local declination and any manually entered heading correction) will be calculated and stored. The result can be displayed using the Configuration > User > Orientation command. This result can be corrected to correspond to the true heading by adjusting the heading correction number (in the Configuration>User>Heading Correction menu). Note that the heading correction is only used during the orientation operation so if it is changed then the orientation operation will need to be repeated to modify the stored heading estimate.

CAUTION should be used when adjusting the heading correction as it may not be appropriate to compensate for a site specific local large field distortion (caused for example by steel rods in concrete platforms) rather than errors caused by the compass mounting or the constant effects of the antenna and mount.

Save the configuration using Configuration > Save command.

It is now necessary to set up the parameters for the LNB that is fitted.

There are three sets of LNB parameters accessed by:

Configuration>Installation > LNB and
Configuration>Installation > Default LNB.
Configuration > User > Final LNB

The LNB parameters define how the LNB will be set up when the system is checking DVB channels and the Default LNB parameters define how it will be set up when performing the initial RF searches. The Final LNB parameters define how the LNB will be set after the target has been acquired.

The LNB parameters to set are LO frequency, Power and Polarisation.
For fixed LO LNBs the LO frequency should be set to the actual LO frequency (in GHz). For universal LNBs where the LO is changed by a tone (22kHz) on the Coax, the LO frequency should be set to 0.0.
Power should be set to 0 if the LNB is separately powered, or 1, if it expects power up the Coax cable.
The Polarisation parameter should be set to indicate the polarisation that would be seen by the LNB when the feed is in its nominal zero degree position (for a satellite on the

same longitude). 0 indicates horizontal and 1 indicates vertical. Normally this parameter is set to 0.

The Default LNB parameters defined in the GUI to set are LO frequency, Power, Volts and Tone. LO frequency should be set as for the LNB. Power should be set to 0 if the LNB is separately powered, or 1, if it expects power up the Coax cable. If the Volts is set to 0 then 18V will be applied to the cable, if it is set to 1 then 13V will be applied. Tone should be set to 0 for no tone (low band) or 1 for active tone (high band).

The Final LNB parameters to set are Power and Volts and Tone. Power should be set to 0 if the LNB is separately powered, or 1, if it expects power up the Coax cable. If the Volts is set to 0 then 18V will be applied to the cable, if it is set to 1 then 13V will be applied. Tone should be set to 0 for no tone (low band) or 1 for active (22kHz) tone (high band).

The Final Pol parameter should be set using

Configuration > User > Final Polarisation.

This parameter defines the polarisation settings of the feed following acquisition. If it is set to 0 then horizontal reception will be enabled. If the parameter is set to 1, then the feed will be rotated 90 degrees to enable Vertical Pol reception. Note that most antennas to which the Ipoint is fitted will use a two port feed. When reception is on Horizontal polarisation, the transmission (without rotating the feed) will be on Vertical polarisation. Similarly with the feed rotated for Vertical polarisation reception, the transmission will be Horizontally polarised.

The Final Band parameter should be set using

Configuration > User > Final LNB.

This parameter defines the LNB settings to be invoked following acquisition.

The Final LNB parameters to set are Power and Volts and Tone. Power should be set to 0 if the LNB is separately powered, or 1, if it expects power up the Coax cable. If the Volts is set to 0 then 18V will be applied to the cable, if it is set to 1 then 13V will be applied. Tone should be set to 0 for no tone (low band) or 1 for active (22kHz) tone (high band).

Before using the system, it is necessary to enter some channel data for reference and target satellites. The easiest way to enter some initial data is to use the Satellites > Upload Satellites command and upload a suitable pre-existing configuration file. For use in the UK, EUStart-sat_V01.cfg provides suitable data.

As a final check on the correct Elevation Fine Tune settings, a number of antennas should be acquired and the predicted and actual Analogue Elevation angles compared. A further version of this document will detail how this can be done.

Parameters

Introduction

The operation of the Ipoint is defined by the setting of a number of parameters. These parameters can all be read and set via the GUI and some are available via the UIU.

A list of these parameters is given below:

List of Parameters

The list of parameters has been split into three groups, Commissioning Parameters, Installation Parameters and User Parameters. This matches the structure in the GUI.

Commissioning Parameters

pwms	*Slow drive speed*
pwmf	*Fast drive speed*
drivefast	*Distance at which to switch between slow and fast drive speeds*
drivestart	*Minimum distance between demanded and actual position to start driving*
drivestop	*Maximum distance between actual and demanded position before drive will stop. This will be a smaller distance than drivestart*
headingel	*Elevation angle at which to read magnetometer*
tickres	*Tick resolution for converting between ticks and degrees*
adcticks	*Conversion factor between ADC and ticks*
adcoffset	*ADC reading for defining position*
adcvalid	*ADC reading at which ADC readings become valid*
tickshift	*Conversion between physical ticks and internal ticks*
currentlimit	*Limits for current and temperature alarms*
prelimhandler	*Required Stow handler*
pritransducer	*Primary position transducer type*
sectransducer	*Secondary position transducer type*
swmask	*Switch mask*
drivefail	*Minimum required movement before drive fail alarm is raised*
adcavg	*ADC dampening*
ticktype	*Tick type (quadrature or single)*
tickhandler	*Tick type (linear or non-linear ticks)*
finetune	*Position finetune offsets*

	calazstart	*Azimuth calibration start positions*
	calazend	*Azimuth calibration end positions*
	calelstart	*Elevation calibration start positions*
	calelend	*Elevation calibration end positions*
	calpolstart	*Polarisation calibration start positions*
	calpolend	*Polarisation calibration end positions*
	ticklineara	*Length A for non-linear ticks*
	ticklinearb	*Length B for non-linear ticks*
	ticklinearc	*C-max for non-linear ticks*
	linearoffset	*Finetune offset for non-linear ticks*
	initialhandler	*Initial position handler*
	softlimitlow	*Softlimit low alarm positions*
	softlimithigh	*Softlimit high alarm positions*
	stowhandler	*defines the stow sequence/ method*
	unstowhandler	*defines the unstow sequence/ method*
	scanmaxcounts	*sets the maximum number of search scans that will be attempted.*
	stowfoul	*sets the elevation angle below which a 2 step (El then Az)drive to the prelim stow position will be used (to prevent fouling low el obstructions)*
	UIconfig	*sets the parameters for UIU operation including baud rate and conditions when GPS data will be transmitted from serial port.*
Installation Parameters	*satsweephandler*	*Sat Sweep Handler*
	alarmdir	*Disable / enable drive direction alarms*
	alarmfail	*Disable / enable drive fail alarms*
	alarmhard	*Disable / enable hard limit alarms*
	alarmsoft	*Disable / enable soft limit alarms*
	alarmcurrent	*Disbale / enable current alarms*
	stowang	*Stow position*
	prelimang	*Preliminary stow position*
	unstowang	*Unstow position*
	peaksize	*Size of peak sweeps*
	xscansize	*Size of xscan sweeps (3-hump scan)*
	satconf	*Percentage of locked channels required to give positive satellite ID*
	satsweepsize	*Size of SatSweep scna*
	satidlimit	*SatLimit (in degrees) to search satellite data for potential satellite ID*

	horizonscansize	*Size of HorizonScan sweep*
User Parameters		
	target	*Required Target and Reference satellite longitudes*
	location	*Geographic location of antenna (normally determined from GPS)*
	platform	*Platform oritenation (pitch, roll, and heading)*
	beaconfloor	*Noise floor reading (automatically determined on deploy)*
	headcorr	*Heading correction that is always applied to magnetometer reading*
	lnb	*Defines LNB attached to antenna*
	dlnb	*Default LNB settings to use whilst scanning & peaking*
	flnb	*LNB settings upon succesful satelite lock*
	finalpol	*Required final polarisation upon succesful satellite lock*
	democentre	*Demo mode centre position*
	democompass	*Demo mode compass sweep position*
	demodelay	*Demo mode delay between cycles*
	ver	*Software version information*

Magnetometer Compass Calibration

Introduction

In common with all magnetic compasses, the magnetometer compass fitted with the **Ipoint** produces significant errors when it is used near ferrous metal objects or current carrying conductors. These errors can be reduced by carrying out a calibration procedure. The calibration procedure will counteract the effects of the platform (typically vehicle) on which the antenna is mounted. Note that calibration can not remove the effects of local variation. Even with perfect calibration, the heading reported will only be the local magnetic heading and not the true heading. The calibration would, normally, only be performed when the antenna is fitted to a new vehicle.

The procedure is described below.

Procedure

The procedure requires the use of Hyperterminal (or other suitable terminal emulator) connected directly to the serial port of the Ipoint. If the Ipoint is being powered from an Advantech UIU, then this will require a bypass cable.

The calibration requires direct writing to registers accessed via the i2c bus. This can be achieved by using the iicwr command as described below.

Calibration should be performed on a flat area as it will not be possible to change the elevation during the process. It is necessary to change the heading of the vehicle to 4 cardinal headings (magnetic) without removing the power to the system.

Restoring Factory Calibration

Use the following method to restore the factory calibration settings. You do this by writing unlock codes to registers 12,13 and 14 and the restore command (0xF2) to register 15.

Reg	Reg	Reg	Reg
0x55	0x5A	0xA5	0xF2

You can do this in one transaction, setting the register address to 12 and writing the four bytes.

On the IPOINT Command line use the command:-

>iicwr c0 0c 55 5a a5 f2.

You should get the response:-

Slave 0xC0, reg[0x0C] = 55 5A A5 F2 (4)

Calibration

Do not attempt this until you have your compass working! Especially if your using the I2C interface - get that fully working first. The module has already been calibrated in the manufacturer's workshop for their inclination, which is 67 degrees. If your location is close to this, you may like to try the compass without re-calibrating at all. Calibration only needs to be done once - the calibration data is stored in EEPROM on the PIC18F2321 chip. You do not need to re-calibrate every time the module is powered up.

Compass module orientation to produce 0 degrees reading.

(This is normally the pointing direction of the dish.)

Before calibrating the compass, you must know exactly which direction is North, East, South and West. Remember these are the magnet poles, not the geographic poles. Don't guess at it. Get a magnetic needle compass and check it. When calibrating, make sure the compass is horizontal at all times with components upwards, don't tilt it. Keep all magnetic and ferrous materials away from the compass during calibration - including your wristwatch.

I2C Method

To calibrate using the I2C bus, you only have to write 255 (0xff) to register 15, once for each of the four major compass points North, East, South and West. The 255 is cleared internally automatically after each point is calibrated. The compass points can be set in any order, but all four points must be calibrated. For example

1. Set the compass module flat, pointing North. To do this first determine the Heading El value, HEV, by typing "headingel" and then (after an unstow) type "goto el HEV". Then write 255 to register 15,

On the IPOINT Command line use the command:-

>iicwr c0 0f ff

You should get the response:-

Slave 0xC0, reg[0x0F] = FF (1)

2. Set the compass module flat, pointing East. This requires moving the vehicle without removing the power.

Write 255 to register 15, by using the same command:-

>iicwr c0 0f ff

3. Set the compass module flat, pointing South. This requires moving the vehicle without removing the power.

Write 255 to register 15, by using the same command:-

>iicwr c0 0f ff

4. Set the compass module flat, pointing West. This requires moving the vehicle without removing the power.

Write 255 to register 15, by using the same command:-

>iicwr c0 0f ff

Calibrating pin (pin5) goes high although this pin is not normally accessible
That's it.

One point which must be emphasized. ***The calibration must be done in exactly four steps***, once for each of the four major compass points North, East, South and West. Previous versions performed part of the calibration at each step and you could actually go back and do a point again, taking 5 or more steps. Only the most recent reading from each point was used. Rev 14 onwards works differently. The 1st step (pulling pin 6 low or writing 255 to register 15) initializes internal construction registers and collects the 1st data set. The remaining steps only collect data. After the final 4th step, multiple processing stages generate and store in EEPROM a number of internal calibration values. When you perform the 1st step, Pin 5 will go low. After the 4th step it will go high again. You can connect an LED from pin 5 to 5v via a 390ohm resistor to indicate calibration is in progress. It should be high (Led off) before you start.

